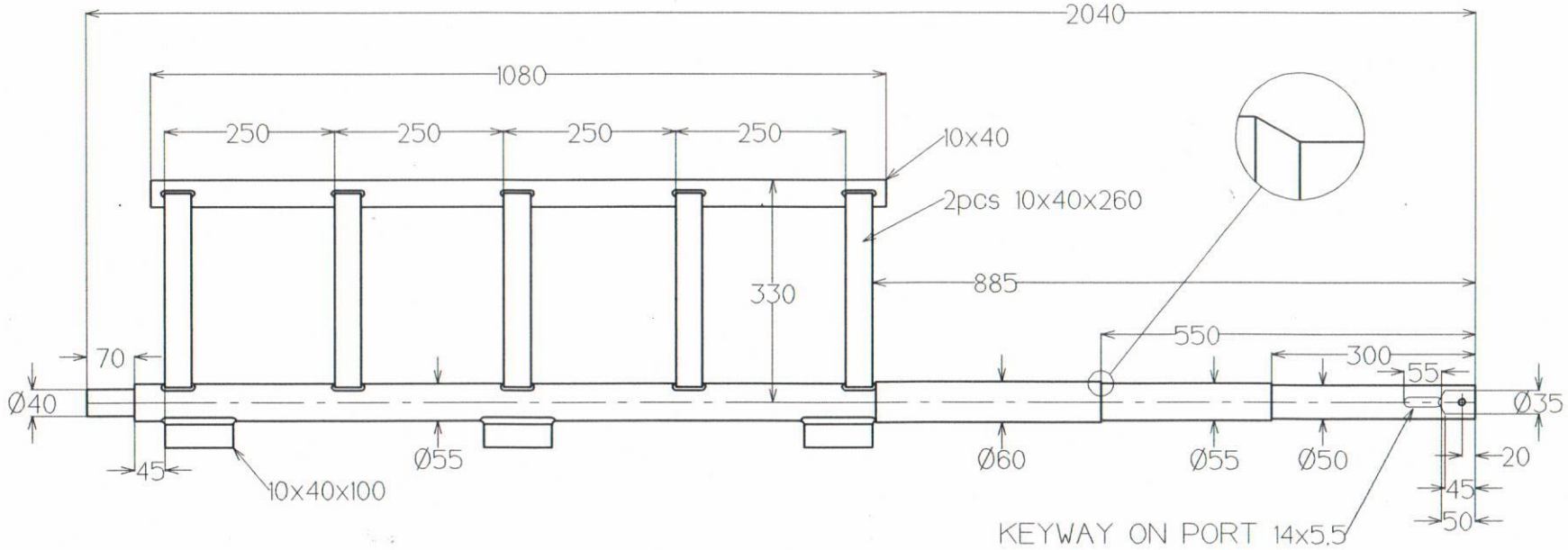

modify date	PROJECT	CONTEST 37	JEFA MARINE A/S SVEJSEGANGEN 3 2690 KARLSLUNDE DENMARK TLF. +45 - 46155210 FAX. +45 - 46155208
modify date	MAT. AlMgSi-1	PART RUDDER STOCK	
modify date	SCALE 1:10	GCD NAME CONTES37	
modify date	DATE 12/12-94	DRAW. NO 28090	