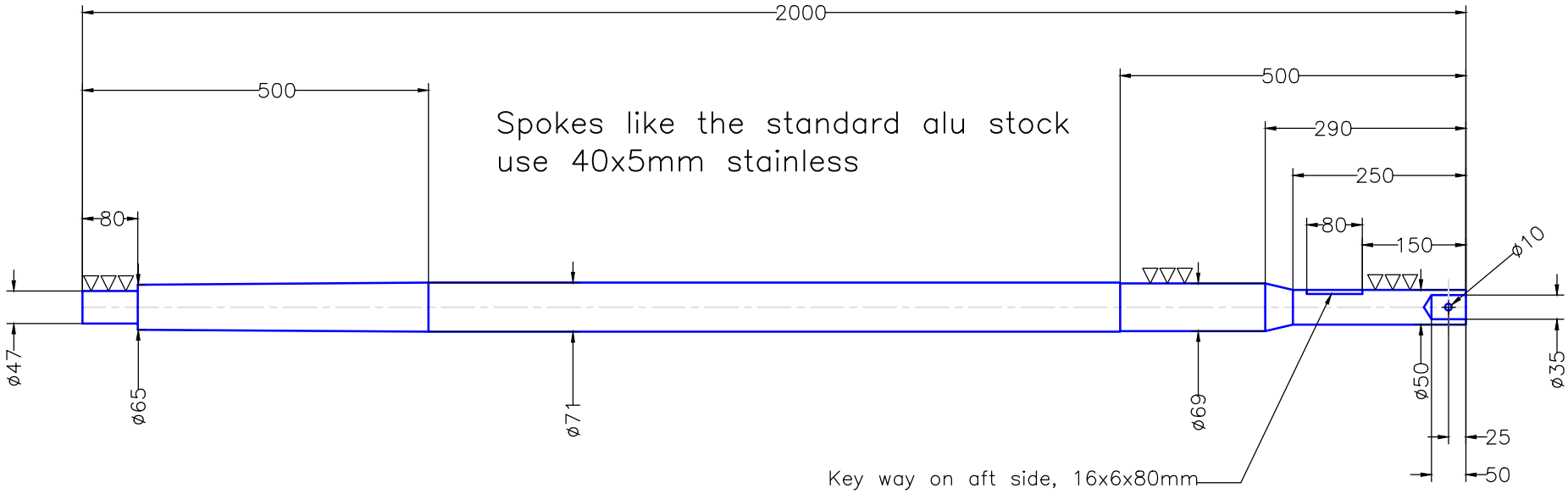

Modify date	Project:	Contest 48 no 48145	
Modify date			
Modify date	Scale	1:10	Date 2007-01-17
Modify date	Material	Aisi329	Drawing no. —
Modify date	Filename (dwg)	Contest 48-aisi329	
Modify date	Drawn by	J.F.	

Jefa Rudder SYSTEMS
JEFA MARINE A/S
NIMBUSVEJ 2
2670 GREVE, DENMARK
Tlf.+45-4615 5210 & Fax +45-4615 5208
E-mail info@jefa.com & WWW.jefa.com