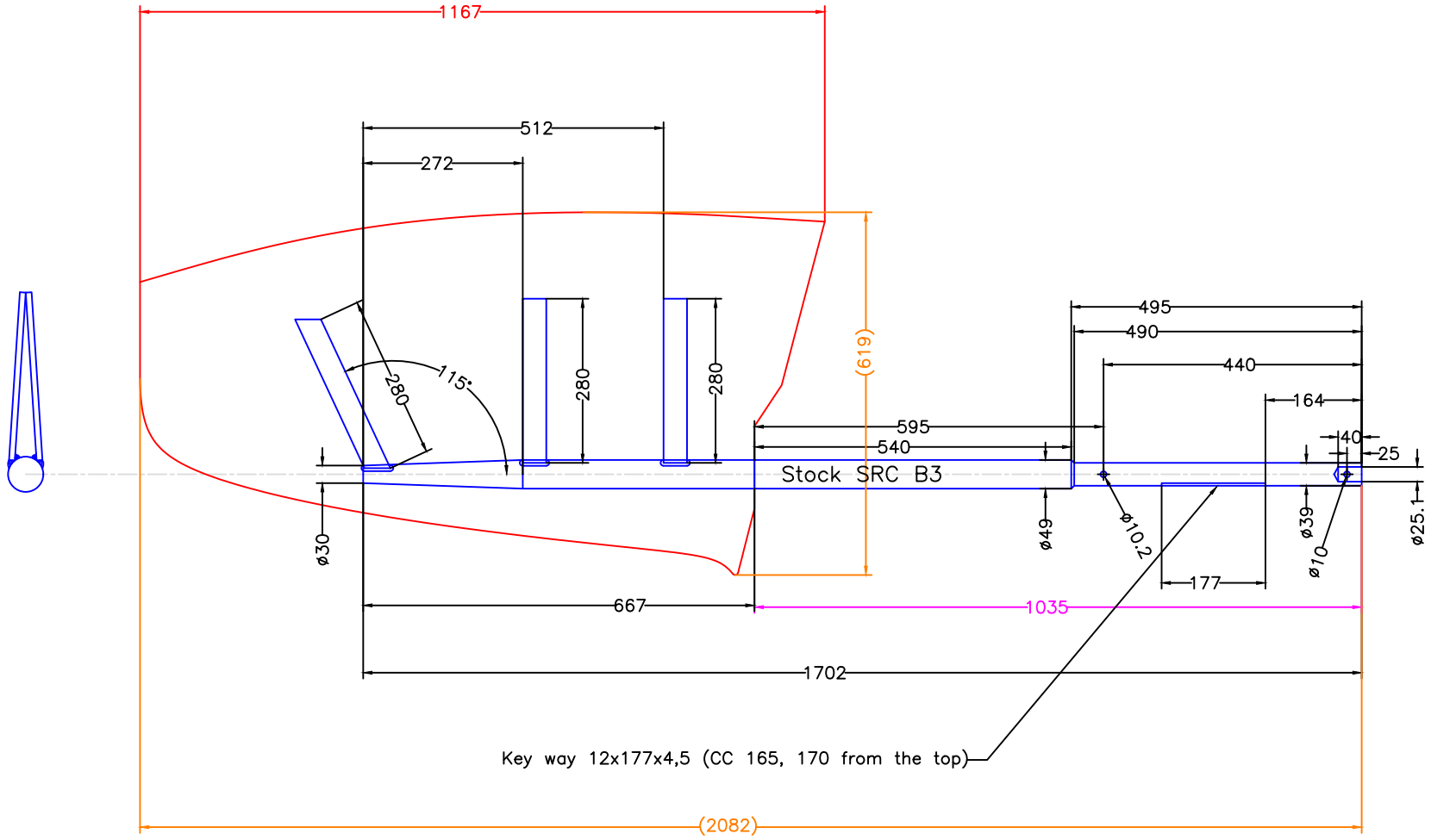

The blade will be made of 1 layer 300g chopped e-glass and 3 layers of 600g chopped e-glass.

The stock will be laminated to one side of the blade with 2 layers of 600g e-glass.

The blade will be filled with a PU form core.

Welding of spokes, will be MIG point welding.

The rudder will be made after ISO12215-8

Modify date: –	Project:	B3 rudder Robertson & Caine	
Modify date: –			
Modify date: –	Scale	1:12	Date 2016-06-24
Modify date	Material	Aisi 630	Drawing no. —
Modify date	Filename (dwg)	B3 rudder	
Modify date	Drawn by	JF	

Jefa Rudder SYSTEMS
JEFA MARINE A/S
NIMBUSVEJ 2
2670 GREVE, DENMARK
Tlf.+45-4615 5210 & Fax +45-4615 5208
E-mail info@jefa.com & WWW.jefa.com