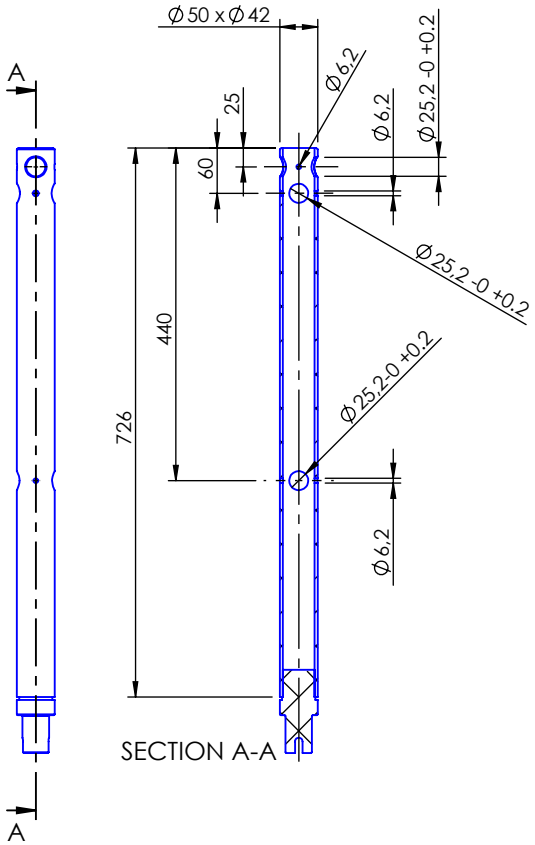

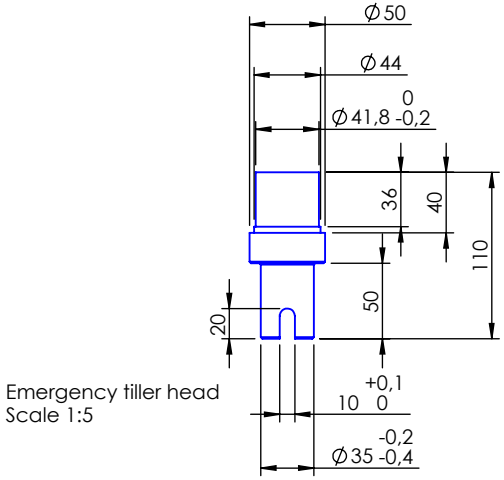

Emergency tiller head
Scale 1:5

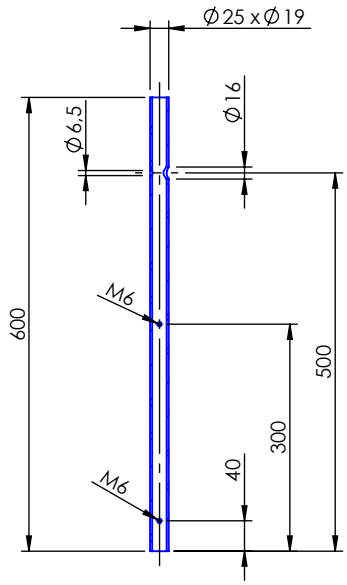

SECTION B-B

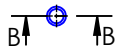

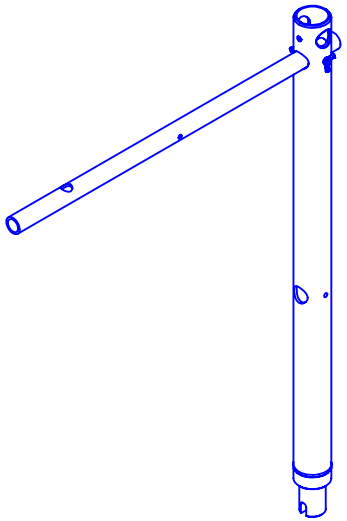

REVISIONS			
Rev.	Descroption	Date	Author

Project: Outremer 55

Jefa Rudder SYSTEMS

JEFA MARINE A/S
NIMBUSVEJ 2
2670 GREVE. DENMARK
Tlf: +45 4615 5210
Email: info@jefa.com www.jefa.com

Product Name: Emergency tiller		Filename: OUT-EMT-35	
Drawing no.: OUT19169		Sheet: 1 of 1	Proj. method:
Material: Alu6082	Scale: 1:10	Format: A4	CAD-System: SolidWorks
Creation Date: 04-05-2020	Dimensions are given in mm. Dimensions without tolerances according to DS/ISO 2768-m.		
Author: michael	This drawing belongs to Jefa Marine A/S and may not be used or shown without permission.		