| REVISIONS | | | |
|---|---|---|---|
| Rev. | Description | Date | Author |

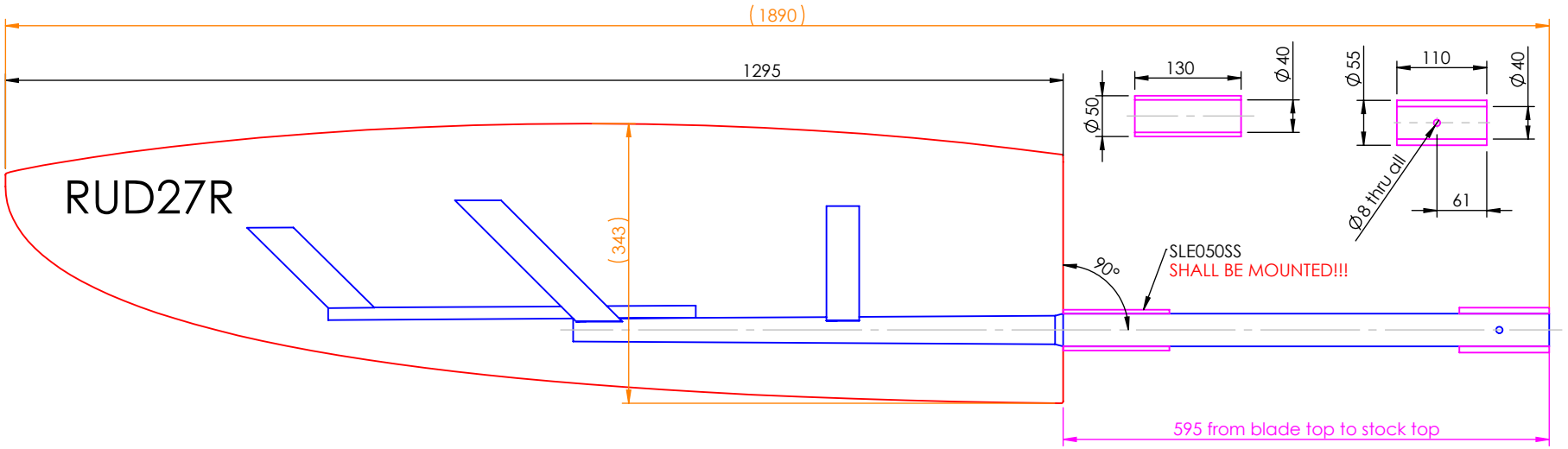


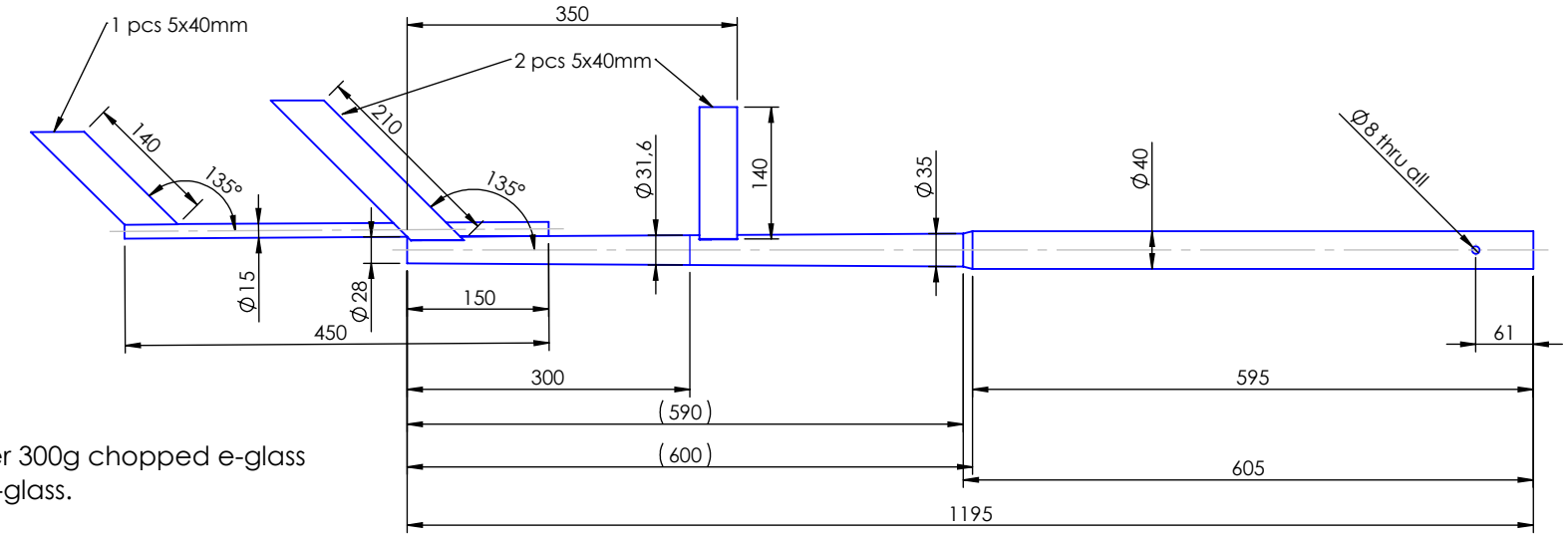


The blade will be made of 1 layer 300g chopped e-glass and 2 layers of 600g chopped e-glass.

The stock will be laminated to one side of the blade with 2 layers of 600g e-glass.

The blade will be filled with a PU form core.

Welding of spokes, will be MIG point welding.

The rudder will be made after ISO12215-8

RUD27R

| | | | |
|---|---|---|---|
| Project: Platu 25 | Product Name: Replacement rudder | Filename: Platu 25 replacement rudder | |
| Jefa Rudder SYSTEMS | Drawing no.: - | Sheet: 1 of 1 | Proj. method: |
| | Material: Aisi 630 | Scale: 1:8 / Format: A4 | CAD-System: SolidWorks |
| | Creation Date: 03-01-2024 | Dimensions are given in mm. Dimensions without tolerances according to DS/ISO 2768-m. | |
| | Author: Thor | This drawing belongs to Jefa Marine A/S and may not be used or shown without permission. | |


JEFA MARINE A/S
NIMBUSVEJ 2
2670 GREVE. DENMARK
Tlf: +45 4615 5210
Email: info@jefa.dk
www.jefa.dk